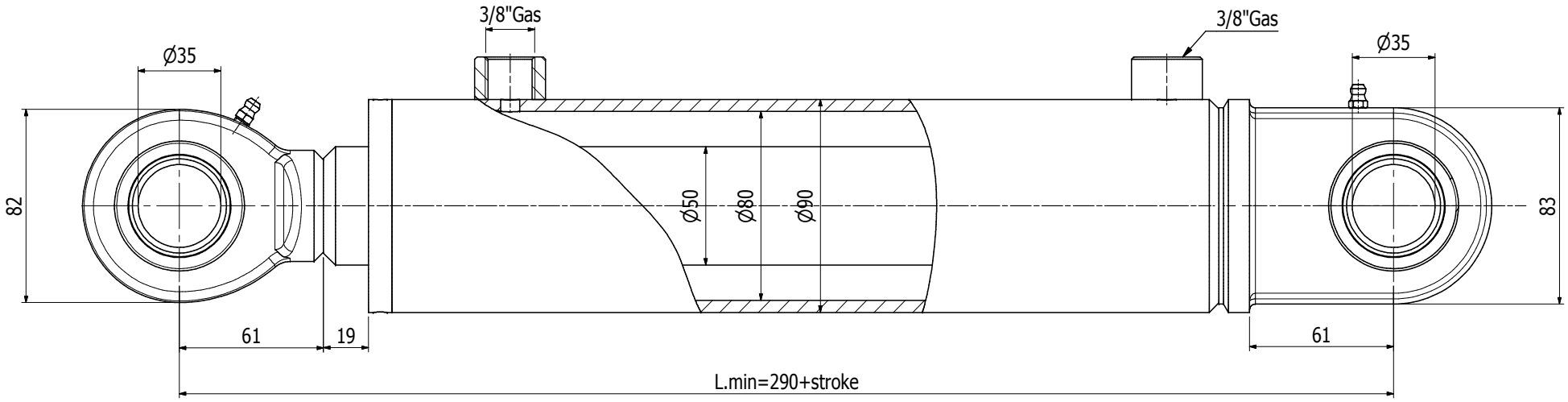

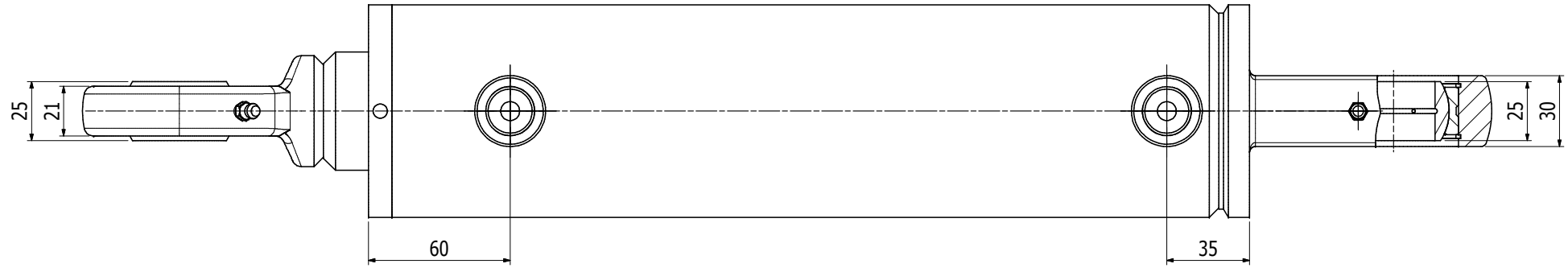

FAROIL CODE	STANDARD CODE	STROKE	L.MIN	FAROIL CODE	STANDARD CODE	STROKE	L.MIN
NR4009	475466220	350	640	NR4004	475466380	800	1090
NR4006	475466240	400	690	NR4016	475466400	900	1190
NR4010	475466280	500	790	NR4012	475466420	1000	1290
NR4002	475466320	600	890	NR4019	475466520	1500	1790
NR4014	475466360	700	990				

POS	CODICE	DESCRIPTION	MATERIALE	QTÀ
1.6	971000123	O-Ring DOWTY 123 (2,62x29,82)	NBR	1
1.5	977080060	PISTON SEAL 80/60 H.22,40 TPM9028	NBR+POM+Polyester	1
1.3	971200845	SEAL GDS - 845	Polyurethane	1
1.2	976500600	ROD SEAL 50/60/8 TTS/L 653 -TSE236196	Polyurethane TECNOLAN	1
1.1	975000050	WIPER D. 50 PW-GHK 322	Polyurethane TECNOLAN	1
1	35108050	SEALING KIT CYLINDER 80/50		1

CUSTOMER APPROVAL

APPROVED BY | APPROVAL DATE

Painting: BLACK PAINTED

Cylinder Marked FA MONTH/YEAR

Weight 15 kg

Max Working Pressure 220 Bar. Working temperature from -20C to +80C Max working speed 0,5 m/s

N°	DATE	MODIFICATION	Approved by	N°	DATE	MODIFICATION	Approved by

FAROIL hydraulic cylinders

TOLERANCE REF: DOC-A087

DOC-A116 Rev.C

DESCRIPTION: EGIL ENG CYLINDER 80/50x...

CUSTOMER REF.

CODE N°: 475466...

INDEX

SCALE	/////
DATE	17/10/2008
DESIGNED BY	G.G.
APPROVED BY	E.B.