Roquet making moves

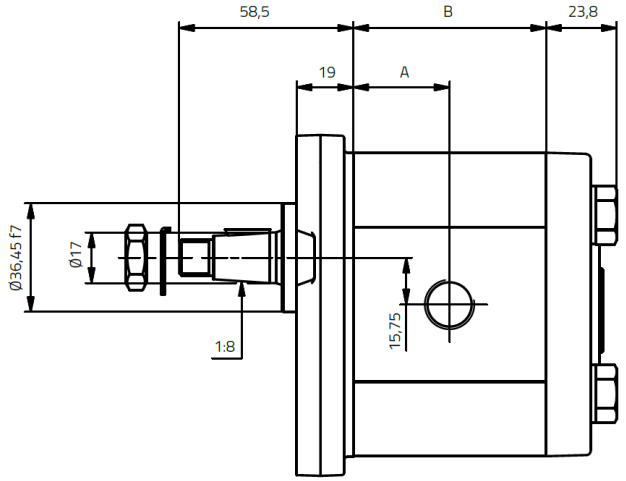

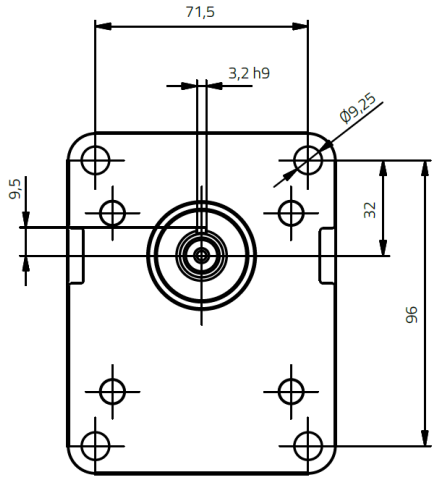

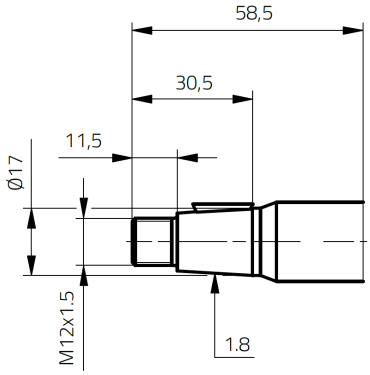

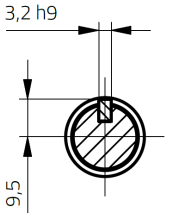

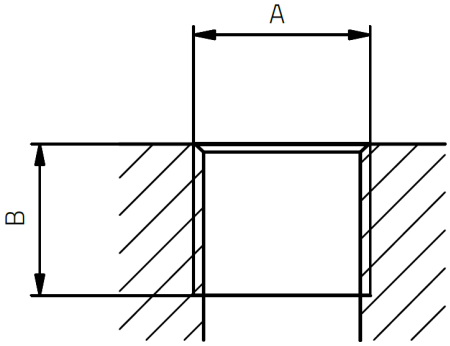

Reference	Displacement cm³/rev	A	B	Weight kg	Max pressure - bar		Min. rpm at 100bar	R Ports	
					Cont.	Int.		A	B
RQ1MG8CRE10R	8	26,8	53,5	3,5	275	300	500	1/2"	18
RQ1MG11CRE10R	10,7	29	58	3,6					
RQ1MG18CRE10R	18	35,3	70,5	4,3	225	250		3/4"	17

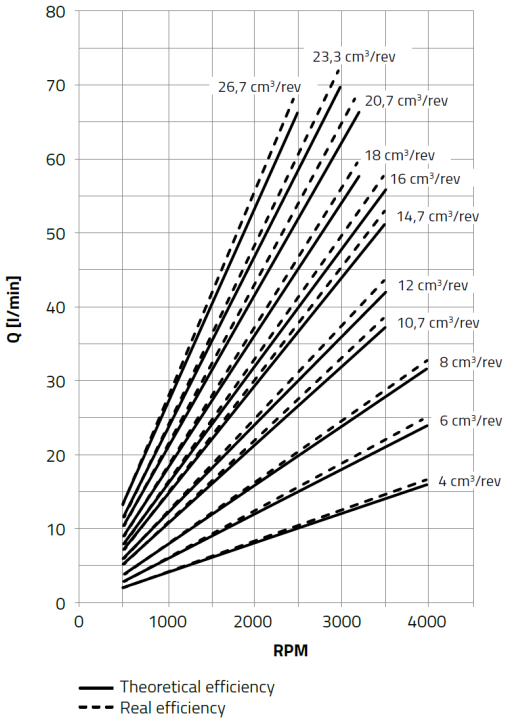

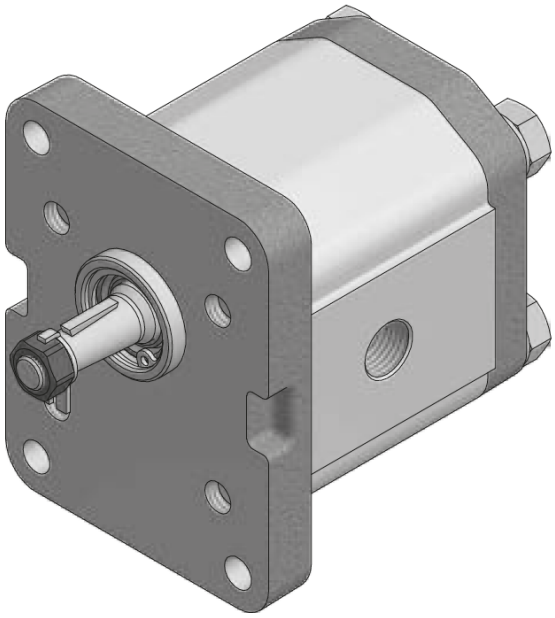

Egil Eng & Co As

Tlf: 22 90 05 60 - Epost: firma@egileng.no